HTM060-1

heaters with terminal block metal cover

> CONTATTACI

Fandis PTC heaters are used for warming up the air inside enclosure, protecting electrical and electronic components from condensation and corrosion. These H series PTC heaters with pluggable terminal block are available in two versions: in metal or plastic, with low surface thermal conductivity to keep safe maintenance operations.

Technical data		
APPROVALS		
Approvals	CE; cURus; UKCA	
PERFORMANCE		
Heating Power	60	W
ELECTRICAL DATA		
Rated Voltage	110-240	V a.c./d.c.
Operating Voltage	99-264	V a.c.
Frequency	50/60	Hz
Max Current	1.42	A
Appliance Class	I	
GENERIC DATA		
Casing Material	Black Anodised Aluminium	
Electrical Connection	Terminal Block	
Wires Section	1-2.5	mm²
Wires Section	20-12	AWG
Fixing System	DIN rail	
ENVIRONMENTAL AND THERMAL DATA		
IP Protection Degree	IP20	
Operating Temperature	-30÷70 -22÷158	°C °F
Storage Temperature	-40÷80 -40÷176	°C °F

Image is for illustrative purpose only. All specifications, data and drawing are subject to change without notice. Please refer to our terms of sales including our warranty and limited liabilities clauses.

HTM060-1

heaters with terminal block metal cover

> CONTATTACI

Technical data		
UL DATA		
UL File Number Recognized Component	E237844	
UL Environmental Type Rating	Open Type	
UL Ambient Temperature	50 122	°C °F

Image is for illustrative purpose only. All specifications, data and drawing are subject to change without notice. Please refer to our terms of sales including our warranty and limited liabilities clauses.

HTM060-1

heaters with terminal block metal cover

> CONTATTACI

Technical drawing mm (in)

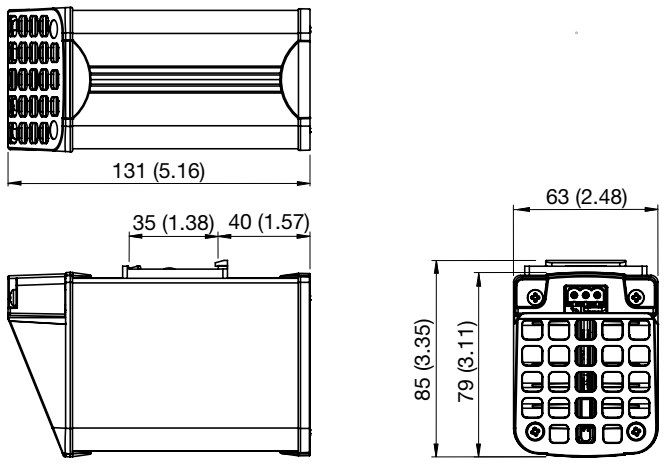

Power-Temperature

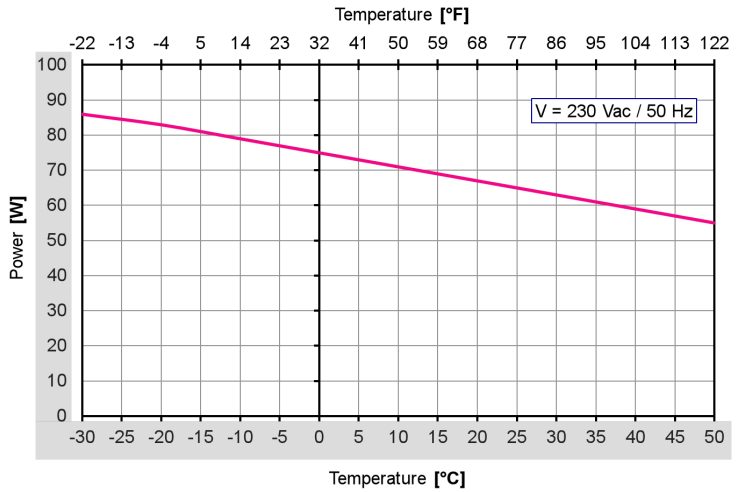

Image is for illustrative purpose only. All specifications, data and drawing are subject to change without notice. Please refer to our terms of sales including our warranty and limited liabilities clauses.

HTM060-1

heaters with terminal block metal cover

> CONTATTACI

Power-Voltage

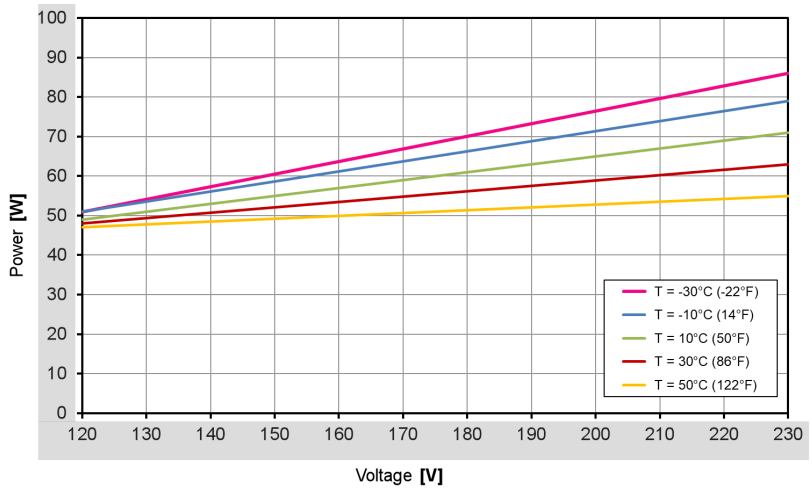

Image is for illustrative purpose only. All specifications, data and drawing are subject to change without notice. Please refer to our terms of sales including our warranty and limited liabilities clauses.