## HVPS200THP-300-1

ventilated heaters thermally protected plastic cov

> CONTATTACI

Fandis PTC heaters are used for warming up the air inside enclosure, protecting electrical and electronic components from condensation and corrosion. These H series PTC heaters with built-in fan ensure quick distribution of heat and are available in two versions: in metal or plastic, with low surface thermal conductivity to keep safe maintenance operations.

| Technical data | | |
|---|---|---|
| **APPROVALS** | | |
| Approvals | CE; cURus; UKCA | |
| **PERFORMANCE** | | |
| Heating Power | 200 | W |
| **ELECTRICAL DATA** | | |
| Rated Voltage | 110-240 | V a.c. |
| Operating Voltage | 99-252 | V a.c. |
| Frequency | 50/60 | Hz |
| Max Current | 7 | A |
| Appliance Class | I | |
| **GENERIC DATA** | | |
| Casing Material | Black PET UL94 V-0 | |
| Electrical Connection | Terminal Block | |
| Wires Section | 1-2.5 | mm² |
| Wires Section | 20-12 | AWG |
| Fixing System | DIN rail | |
| **ENVIRONMENTAL AND THERMAL DATA** | | |
| IP Protection Degree | IP20 | |
| Operating Temperature | -30÷70<br>-22÷158 | °C<br>°F |
| Storage Temperature | -40÷75<br>-40÷167 | °C<br>°F |

Image is for illustrative purpose only. All specifications, data and drawing are subject to change without notice. Please refer to our terms of sales including our warranty and limited liabilities clauses.

## HVPS200THP-300-1

ventilated heaters thermally protected plastic cov

> CONTATTACI

| Technical data | | |
|---|---|---|
| **UL DATA** | | |
| UL File Number Recognized Component | E237844 | |
| UL Environmental Type Rating | Open Type | |
| UL Surrounding Temperature | 70<br>158 | °C<br>°F |

Image is for illustrative purpose only. All specifications, data and drawing are subject to change without notice. Please refer to our terms of sales including our warranty and limited liabilities clauses.

## HVPS200THP-300-1

ventilated heaters thermally protected plastic cov

> CONTATTACI

### Technical drawing mm (in)

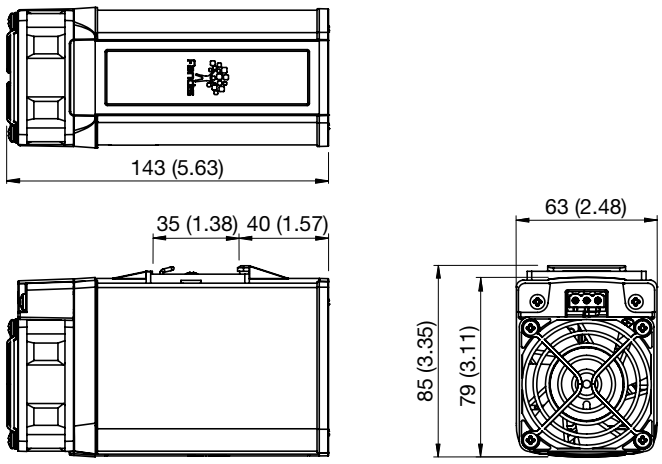


### Power-Temperature

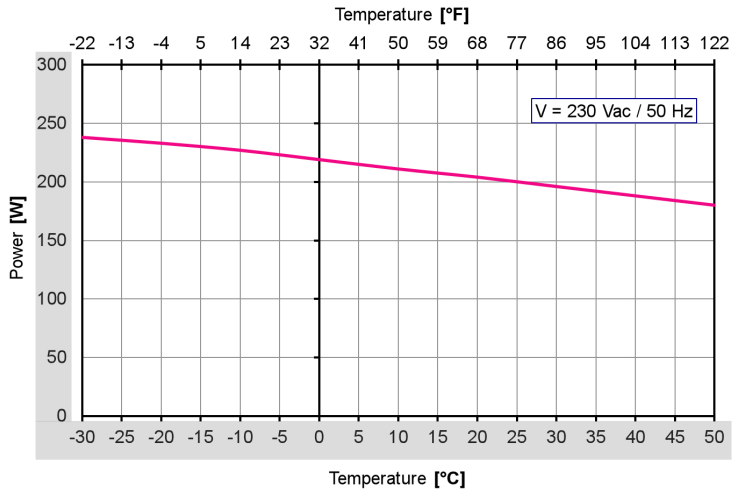


Image is for illustrative purpose only. All specifications, data and drawing are subject to change without notice. Please refer to our terms of sales including our warranty and limited liabilities clauses.

## HVPS200THP-300-1

ventilated heaters thermally protected plastic cov

> CONTATTACI

### Power-Voltage

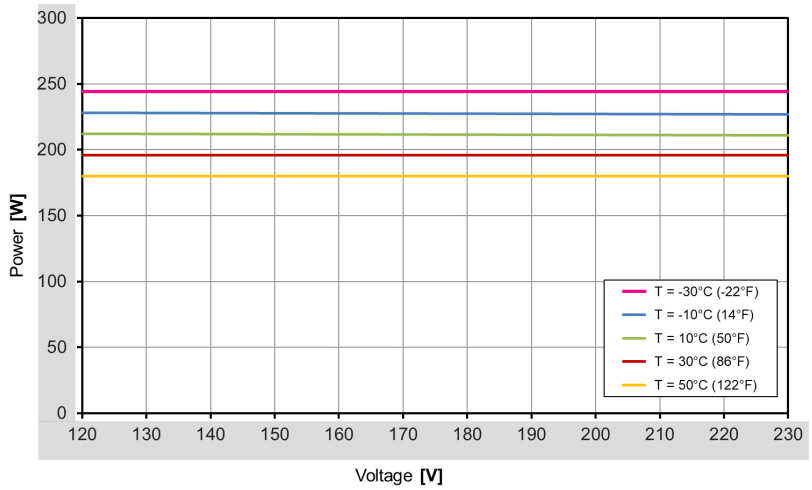


Image is for illustrative purpose only. All specifications, data and drawing are subject to change without notice. Please refer to our terms of sales including our warranty and limited liabilities clauses.