FF15A115UN52

IP55 version with fan

> CONTACT US



FF series exhaust filter and filter fans represents a side-mounted cooling solution with filtered ambient air to maintain optimum ventilation inside the electrical cabinets. Screwless connection, fast tool-free mounting system with clip and maintenance friendliness are the main benefits. Available in a wide range of configurations for both indoor and outdoor use.

Technical data		
APPROVALS		
Approvals	CE; cURus; cULus; cCSAus; UKCA	
PERFORMANCE		
Max Airflow	185/225 109/132	m³/h CFM
Airflow with Exhaust Filter	120/148 71/87	m³/h CFM
Max Static Pressure	112/149 0.45/0.60	Pa in H2O
ELECTRICAL DATA		
Rated Voltage	115	V a.c.
Rated Current	0.36/0.361	A
Rated Power	39/41	W
Operating Voltage	103-126	V a.c.
Frequency	50/60	Hz
Appliance Class	I	
Motor Protection	Thermally Protected	
MECHANICAL DATA		
Mounting Wall Thickness	1.3-3.7 0.05-0.15	mm in
Bearing	Ball Bearing	

Image is for illustrative purpose only. All specifications, data and drawing are subject to change without notice. Please refer to our terms of sales including our warranty and limited liabilities clauses.

FF15A115UN52

IP55 version with fan

> CONTACT US

Technical data		
GENERIC DATA		
Spare Parts Filter Media	M15FPF	
Casing Material	PC/ABS UL94 V-0	
RAL Number	7035	
Life Expectancy	100000 100000	h at 25 °C h at 77 °F
Airflow Direction	Direct	
Electrical Connection	Screwless Terminal Block	
Wires Section	0.75-2.5	mm²
Wires Section	20-14	AWG
Fan Noise	52/56	dB(A)
Filter Class	G4	EN 779
Filter Class	ISO coarse 75%	ISO 16890
Filter Material	thermo-linked progressive structure synthetic fibre	
ENVIRONMENTAL AND THERMAL DATA		
IP Protection Degree	IP55	
Operating Temperature	-10÷55 14÷131	°C °F
Storage Temperature	-40÷70 -40÷158	°C °F
UL DATA		
UL File Number Recognized Component	E237844	
UL File Number Listed	E500932	
UL Environmental Type Rating	Type 12	
UL Surrounding Temperature	55 131	°C °F

Image is for illustrative purpose only. All specifications, data and drawing are subject to change without notice. Please refer to our terms of sales including our warranty and limited liabilities clauses.

FF15A115UN52

IP55 version with fan

> CONTACT US

Technical drawing mm (in)

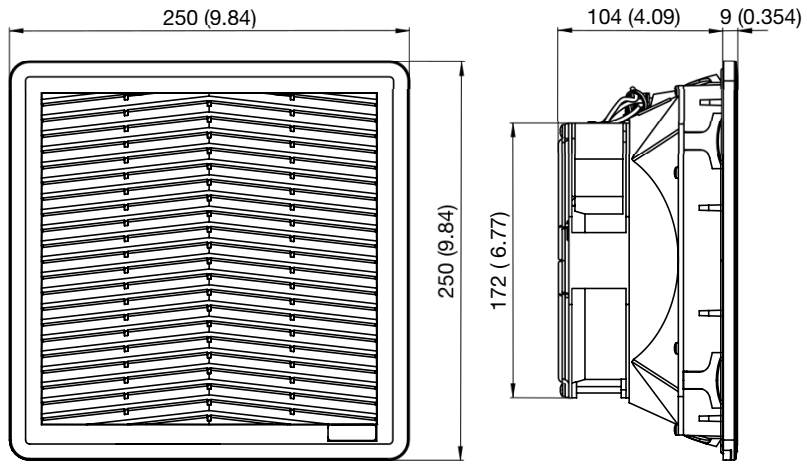

Mounting cut-out mm (in)

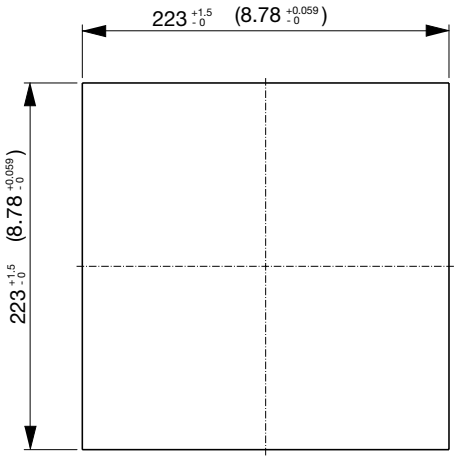

Image is for illustrative purpose only. All specifications, data and drawing are subject to change without notice. Please refer to our terms of sales including our warranty and limited liabilities clauses.

FF15A115UN52

IP55 version with fan

> CONTACT US

Air performance

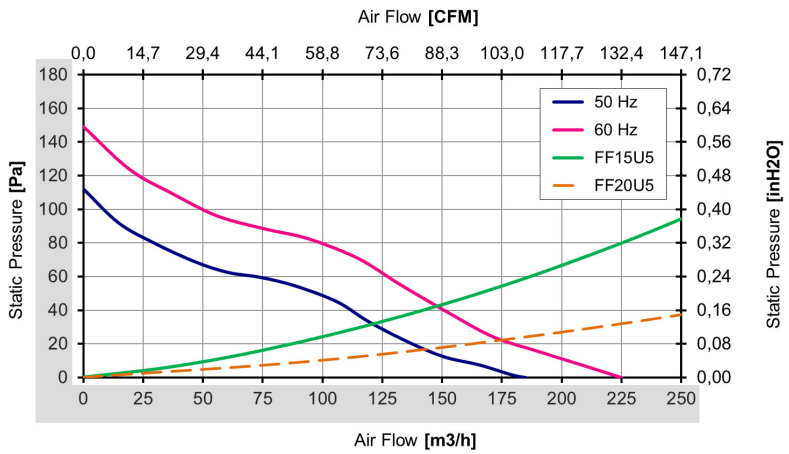

Image is for illustrative purpose only. All specifications, data and drawing are subject to change without notice. Please refer to our terms of sales including our warranty and limited liabilities clauses.