VFC3N23HTBBSG | hot air exhaust fans

> CONTATTACI

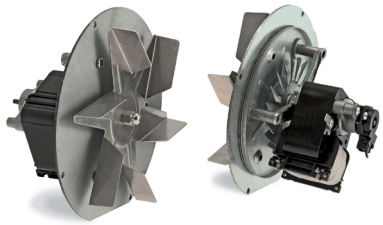

Hot air exhaust fans, equipped with single-phase asynchronous motors with external rotor, are designed to convey outside the hot combustion smokes of pellet fireplace inserts and stoves. Two types of extractors: with shielded pole motor and with condenser motor; they represent both a safe and effective solution for keeping heating systems at maximum performance.

Technical data		
APPROVALS		
Approvals	CE; UKCA	
PERFORMANCE		
Max Airflow	155 91	m³/h CFM
Max Static Pressure	291 1.17	Pa in H2O
RPM	2770	RPM
ELECTRICAL DATA		
Max Collector Current	10	mA
Max Voltage Open Collector	20	V d.c.
Rated Voltage	230	V a.c.
Rated Current	0.52	A
Rated Power	58	W
Operating Voltage	207-253	V a.c.
Frequency	50	Hz
Appliance Class	I	
Insulation Class	H	
Motor Protection	Impedance Protected	
MECHANICAL DATA		
Bearing	Ball Bearing	

Image is for illustrative purpose only. All specifications, data and drawing are subject to change without notice. Please refer to our terms of sales including our warranty and limited liabilities cla

VFC3N23HTBBSG | hot air exhaust fans

> CONTATTACI

Technical data		
GENERIC DATA		
Impeller Material	Stainless steel	
Life Expectancy	20000 20000	h at 25 °C h at 77 °F
Electrical Connection	Fast-On Male 6,35	
Fan Noise	68	dB(A)
Test Condition	Fan tested with CCL-VFC-02 scroll	
ENVIRONMENTAL AND THERMAL DATA		
Operating Temperature	0÷80 32÷176	°C °F
Storage Temperature	-30÷100 -22÷212	°C °F
INDUSTRY 4.0		
Tachometer Output	1	pulse/ revolution

Image is for illustrative purpose only. All specifications, data and drawing are subject to change without notice. Please refer to our terms of sales including our warranty and limited liabilities cla

VFC3N23HTBBSG | hot air exhaust fans

> CONTATTACI

Technical drawing mm (in)

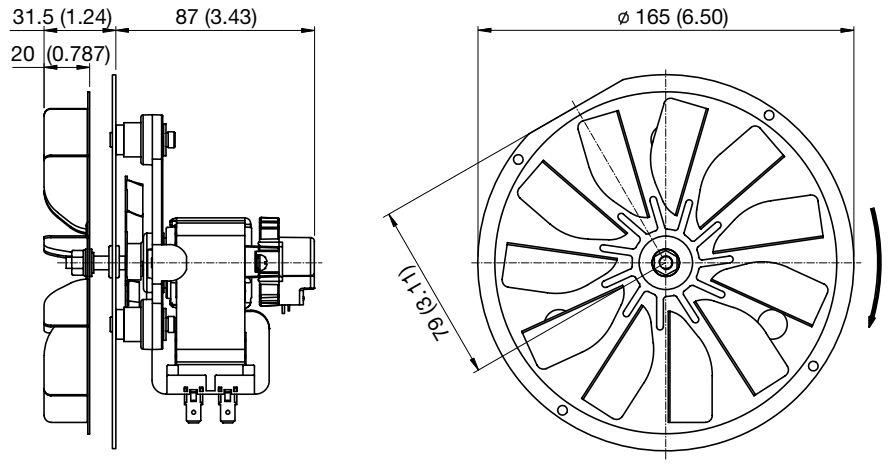

Wiring diagram

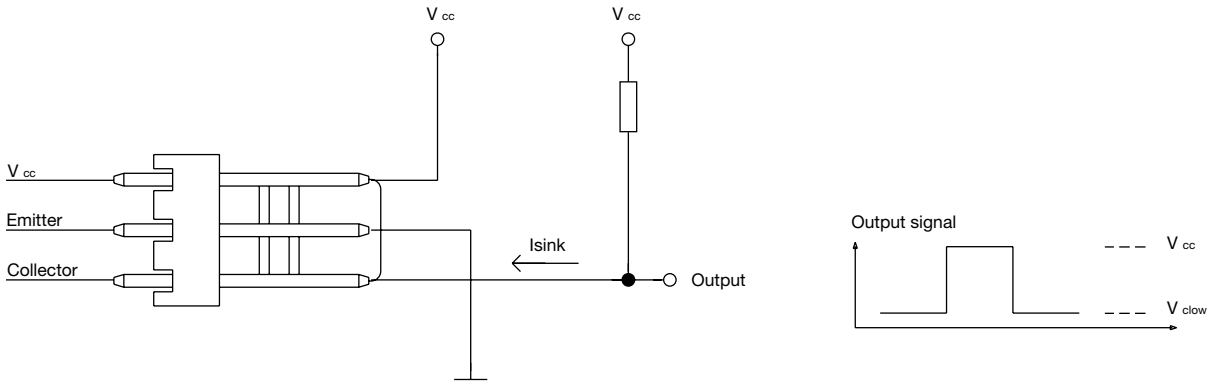

Image is for illustrative purpose only. All specifications, data and drawing are subject to change without notice. Please refer to our terms of sales including our warranty and limited liabilities cla

VFC3N23HTBBSG | hot air exhaust fans

> CONTATTACI

Air Performance

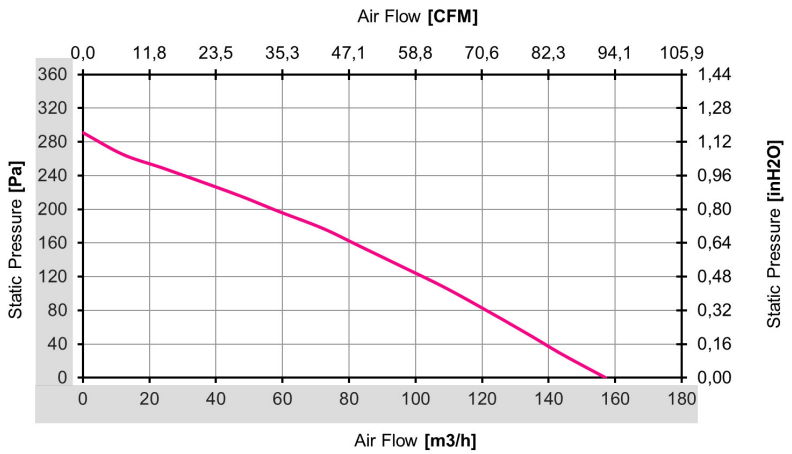

Image is for illustrative purpose only. All specifications, data and drawing are subject to change without notice. Please refer to our terms of sales including our warranty and limited liabilities cla