VFC3L23HKBBSG-V50 | hot air exhaust fans

> CONTATTACI

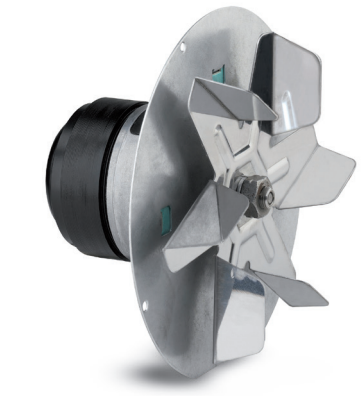

Hot air exhaust fans, equipped with single-phase asynchronous motors with external rotor, are designed to convey outside the hot combustion smokes of pellet fireplace inserts and stoves. Two types of extractors: with shielded pole motor and with condenser motor; they represent both a safe and effective solution for keeping heating systems at maximum performance.

Technical data		
APPROVALS		
Approvals	CE; UKCA	
PERFORMANCE		
Max Airflow	145 85	m³/h CFM
Max Static Pressure	240 0.96	Pa in H2O
RPM	2500	RPM
ELECTRICAL DATA		
Max Collector Current	20	mA
Max Voltage Open Collector	24	V d.c.
Rated Voltage	230	V a.c.
Rated Current	0.2	A
Rated Power	30	W
Operating Voltage	207-253	V a.c.
Frequency	50	Hz
Appliance Class	I	
Insulation Class	F	
Capacitor	1	µF
Motor Protection	Thermally Protected	
MECHANICAL DATA		
Bearing	Ball Bearing	

Image is for illustrative purpose only. All specifications, data and drawing are subject to change without notice. Please refer to our terms of sales including our warranty and limited liabilities cla

VFC3L23HKBBSG-V50 | hot air exhaust fans

> CONTATTACI

Technical data		
GENERIC DATA		
Impeller Material	Stainless steel	
Test Condition	Fan tested with CCL-VFC-02 scroll	
ENVIRONMENTAL AND THERMAL DATA		
IP Protection Degree	IP44	
Operating Temperature	-10÷80 14÷176	°C °F
INDUSTRY 4.0		
Tachometer Output	1	pulse/ revolution

Image is for illustrative purpose only. All specifications, data and drawing are subject to change without notice. Please refer to our terms of sales including our warranty and limited liabilities cla

VFC3L23HKBBSG-V50 | hot air exhaust fans

> CONTATTACI

Technical drawing mm (in)

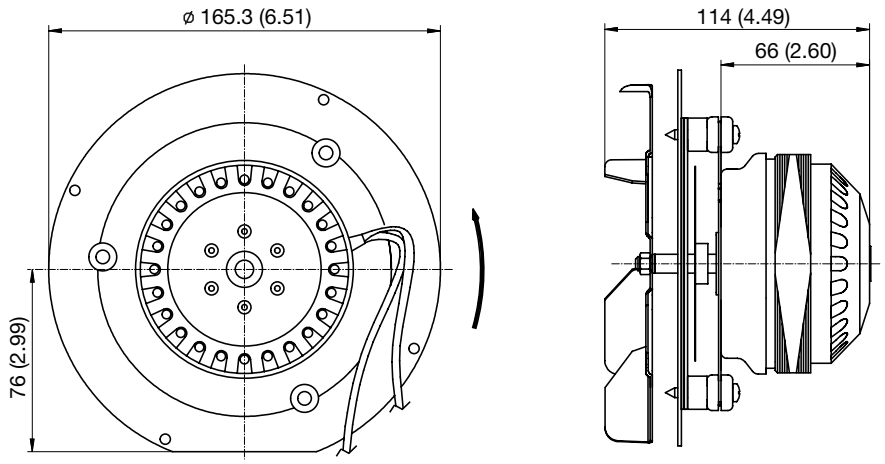

Wiring diagram

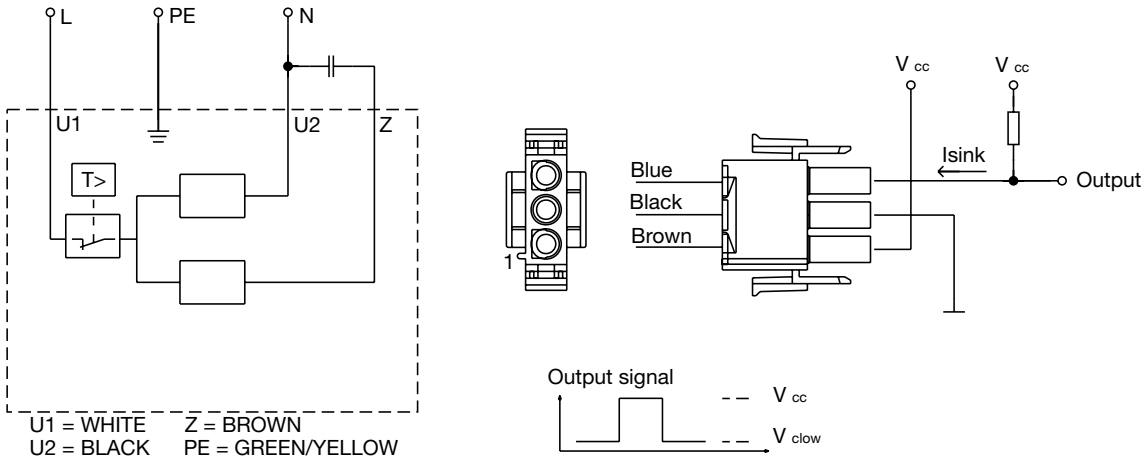

Image is for illustrative purpose only. All specifications, data and drawing are subject to change without notice. Please refer to our terms of sales including our warranty and limited liabilities cla

VFC3L23HKBBSG-V50

hot air exhaust fans

> CONTATTACI

Air Performance

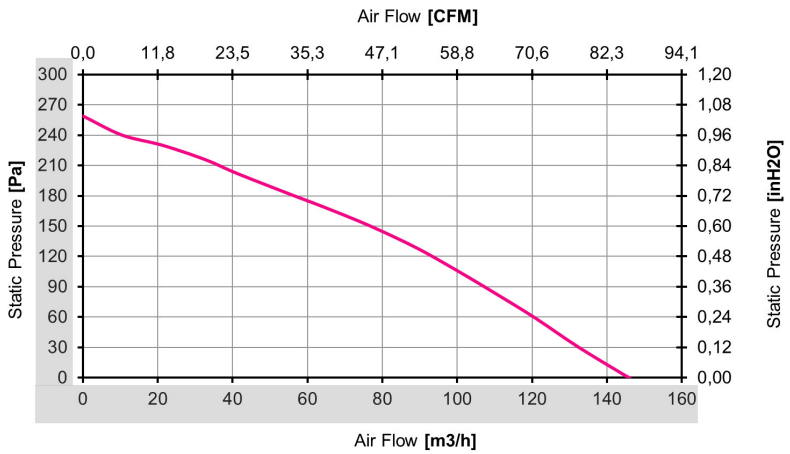

Image is for illustrative purpose only. All specifications, data and drawing are subject to change without notice. Please refer to our terms of sales including our warranty and limited liabilities cla