EF02-23F0-A2-101 | with scroll

> CONTACT US



Hot air exhaust fans, equipped with single-phase asynchronous motors with external rotor, are designed to convey outside the hot combustion smokes of pellet fireplace inserts and stoves. Two types of extractors: with shielded pole motor and with condenser motor; they represent both a safe and effective solution for keeping heating systems at maximum performance.

Technical data		
APPROVALS		
Approvals	CE	
PERFORMANCE		
Max Airflow	145/166 85/98	m³/h CFM
Max Static Pressure	264/370 1.06/1.49	Pa in H2O
RPM	2510/2910	RPM
ELECTRICAL DATA		
Rated Voltage	230	V a.c.
Rated Current	0.124/0.137	A
Rated Power	28/31	W
Operating Voltage	207-253	V a.c.
Frequency	50/60	Hz
Appliance Class	I	
Insulation Class	F	
Capacitor	1	µF
Motor Protection	Thermally Protected	
MECHANICAL DATA		
Bearing	Ball Bearing	
GENERIC DATA		
Electrical Connection	Wires	

Image is for illustrative purpose only. All specifications, data and drawing are subject to change without notice. Please refer to our terms of sales including our warranty and limited liabilities clauses.

EF02-23F0-A2-101 | with scroll

> CONTACT US

Technical data		
Cable Length	700 27.56	mm in
ENVIRONMENTAL AND THERMAL DATA		
IP Protection Degree	IP20	
Operating Temperature	-20÷70 -4÷158	°C °F
Storage Temperature	-20÷70 -4÷158	°C °F

Image is for illustrative purpose only. All specifications, data and drawing are subject to change without notice. Please refer to our terms of sales including our warranty and limited liabilities clauses.

EF02-23F0-A2-101 | with scroll

> CONTACT US

Technical drawing mm (in)

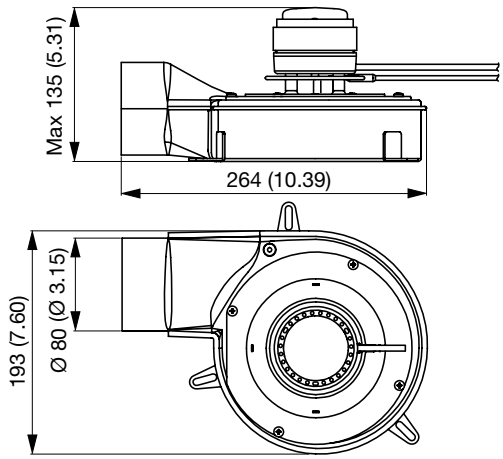

Wiring diagram

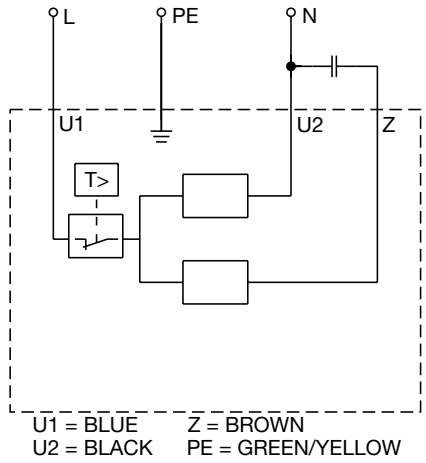

Image is for illustrative purpose only. All specifications, data and drawing are subject to change without notice. Please refer to our terms of sales including our warranty and limited liabilities clauses.

EF02-23F0-A2-101 | with scroll

> CONTACT US

Air performance

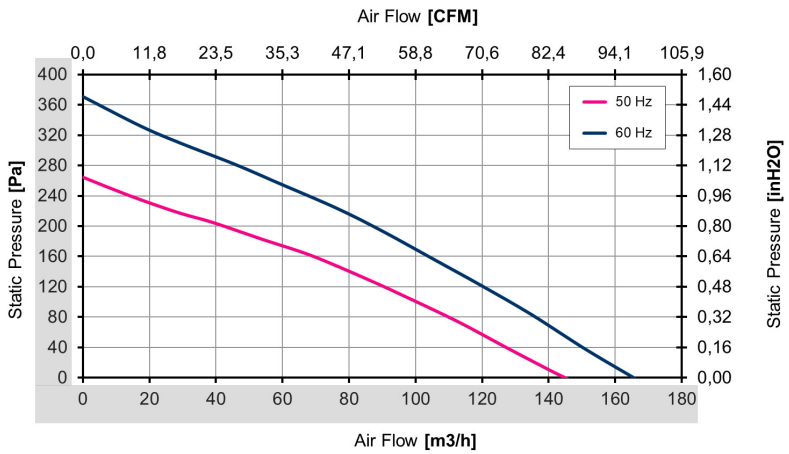

Image is for illustrative purpose only. All specifications, data and drawing are subject to change without notice. Please refer to our terms of sales including our warranty and limited liabilities clauses.