DC1G05MWBA01 | DC centrifugal fans

> CONTATTACI



Blowers provide forced-air cooling solution to temperature-sensitive applications. Blowers with brushless DC motor produce concentrated airflow and are suitable to work with high impedance systems. Available in different sizes, air volumes and pressure.

Technical data		
APPROVALS		
Approvals	CE; cURus; UKCA	
PERFORMANCE		
Max Airflow	48 28	m³/h CFM
Max Static Pressure	220 0.88	Pa in H2O
RPM	2300	RPM
ELECTRICAL DATA		
Rated Voltage	24	V d.c.
Rated Current	0.39	A
Rated Power	9.4	W
Operating Voltage	21.6-26.4	V d.c.
Starting Voltage	17	V d.c.
Insulation Class	A	
Motor Protection	Electronically Protected	
MECHANICAL DATA		
Diameter	120 4.72	mm in
Bearing	Ball Bearing	
GENERIC DATA		
Casing Material	Plastic UL94-V0	

Image is for illustrative purpose only. All specifications, data and drawing are subject to change without notice. Please refer to our terms of sales including our warranty and limited liabilities clauses.

DC1G05MWBA01 | DC centrifugal fans

> CONTATTACI

Technical data		
Life Expectancy	70000 70000	h at 40 °C h at 104 °F
Electrical Connection	Wires	
Fan Noise	49	dB(A)
Cable Length	285 11.22	mm in
Fixing System	Screws	
ENVIRONMENTAL AND THERMAL DATA		
IP Protection Degree	IP20	
Operating Temperature	-10÷70 14÷158	°C °F
Storage Temperature	-40÷70 -40÷158	°C °F
UL DATA		
UL File Number Recognized Component	E223195	

Image is for illustrative purpose only. All specifications, data and drawing are subject to change without notice. Please refer to our terms of sales including our warranty and limited liabilities clauses.

DC1G05MWBA01 | DC centrifugal fans

> CONTATTACI

Technical drawing mm (in)

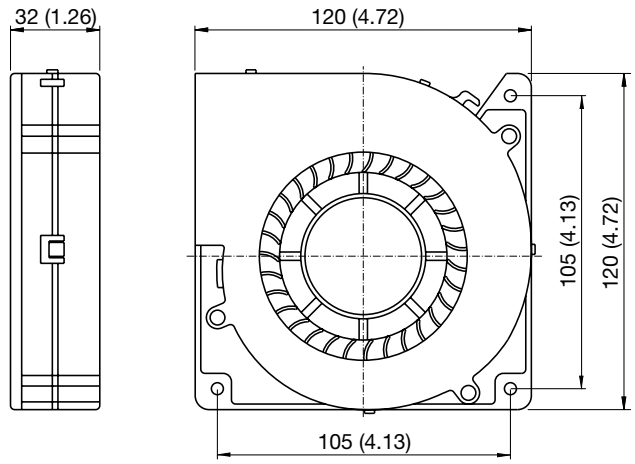

Air Performance

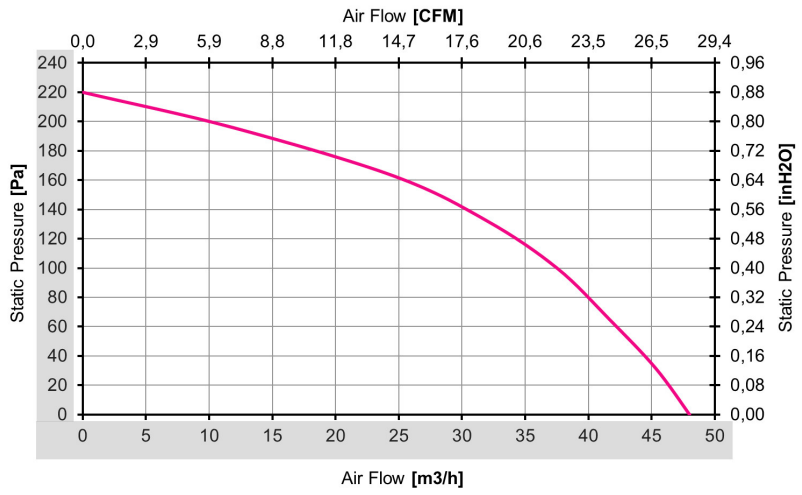

Image is for illustrative purpose only. All specifications, data and drawing are subject to change without notice. Please refer to our terms of sales including our warranty and limited liabilities clauses.