D08A04HWBAF0 | IP68 DC fans

> CONTATTACI



Axial fans provide forced-air cooling solution to temperature-sensitive applications. Compact fans with AC shaded pole or capacitor and DC brushless motor are designed for ventilation and spot cooling of internal machinery components, especially in areas in confined spaces. Available also versions tested to withstand harsh environmental conditions (IP55, IP68, all metal and HTR fans).

Technical data		
APPROVALS		
Approvals	CE; cURus; UKCA	
PERFORMANCE		
Max Airflow	63 37	m³/h CFM
Max Static Pressure	39 0.16	Pa in H2O
RPM	3000	RPM
ELECTRICAL DATA		
Rated Voltage	12	V d.c.
Rated Current	0.18	A
Rated Power	2.16	W
Operating Voltage	10.8-13.2	V d.c.
Starting Voltage	7	V d.c.
Insulation Class	A	
Motor Protection	Electronically Protected	
MECHANICAL DATA		
Bearing	Ball Bearing	
GENERIC DATA		
Casing Material	Plastic UL94-V0	
Life Expectancy	70000 70000	h at 40 °C h at 104 °F

Image is for illustrative purpose only. All specifications, data and drawing are subject to change without notice. Please refer to our terms of sales including our warranty and limited liabilities clauses.

D08A04HWBAF0 | IP68 DC fans

> CONTATTACI

Technical data		
Airflow Direction	Air exhaust over brackets	
Electrical Connection	Wires	
Fan Noise	35.8	dB(A)
Cable Length	300 11.81	mm in
Fixing System	Screws	
ENVIRONMENTAL AND THERMAL DATA		
IP Protection Degree	IP68	
Operating Temperature	-10÷70 14÷158	°C °F
Storage Temperature	-40÷70 -40÷158	°C °F
UL DATA		
UL File Number Recognized Component	E223195	

Image is for illustrative purpose only. All specifications, data and drawing are subject to change without notice. Please refer to our terms of sales including our warranty and limited liabilities clauses.

D08A04HWBAF0 | IP68 DC fans

> CONTATTACI

Technical drawing mm (in)

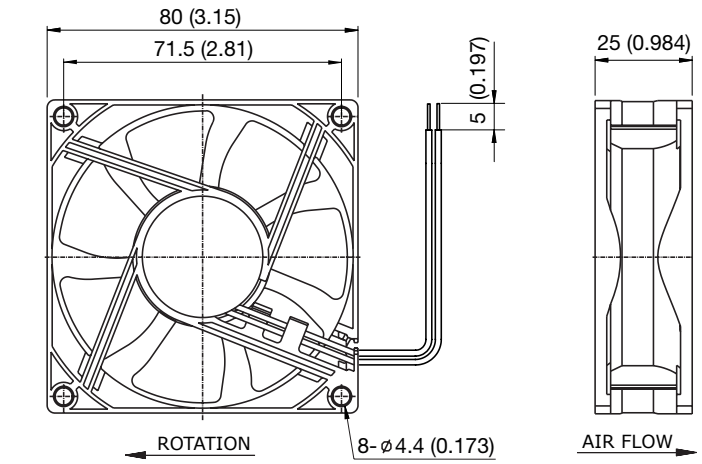

Air Performance

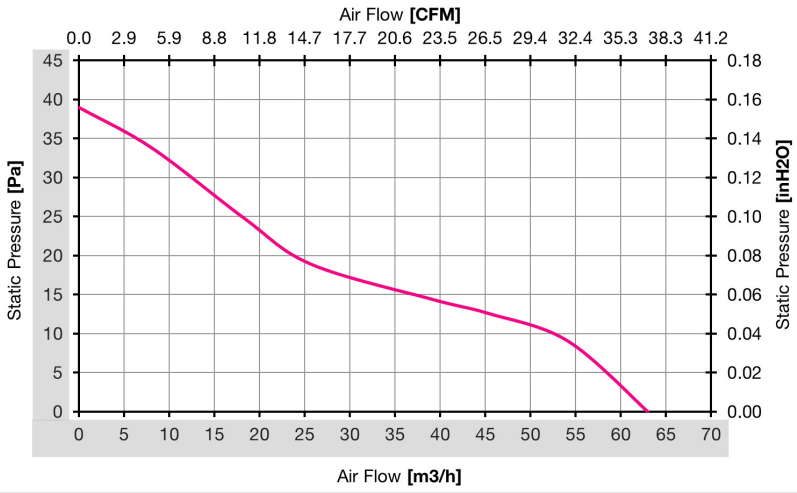

Image is for illustrative purpose only. All specifications, data and drawing are subject to change without notice. Please refer to our terms of sales including our warranty and limited liabilities clauses.