A12B12HTBMT0

high temperature resistant AC fans

> CONTATTACI



Axial fans provide forced-air cooling solution to temperature-sensitive applications. Compact fans with AC shaded pole or capacitor and DC brushless motor are designed for ventilation and spot cooling of internal machinery components, especially in areas in confined spaces. Available also versions tested to withstand harsh environmental conditions (IP55, IP68, all metal and HTR fans).

Technical data		
APPROVALS		
Approvals	CE; UKCA	
PERFORMANCE		
Max Airflow	150/175 88/103	m³/h CFM
Max Static Pressure	64/60 0.26/0.24	Pa in H2O
RPM	2700/3100	RPM
ELECTRICAL DATA		
Rated Voltage	115	V a.c.
Rated Current	0.1/0.09	A
Rated Power	17/15	W
Operating Voltage	103-126	V a.c.
Frequency	50/60	Hz
Appliance Class	I	
Insulation Class	F	
Motor Protection	Impedance Protected	
MECHANICAL DATA		
Bearing	Ball Bearing	
GENERIC DATA		
Casing Material	Die-Casting Aluminium	

Image is for illustrative purpose only. All specifications, data and drawing are subject to change without notice. Please refer to our terms of sales including our warranty and limited liabilities clauses.

A12B12HTBMT0 | high temperature resistant AC fans

> CONTATTACI

Technical data		
Life Expectancy	40000 40000	h at 40 °C h at 104 °F
Airflow Direction	Air exhaust over brackets	
Electrical Connection	Fast-On 3x0,5mm	
Fan Noise	42/46	dB(A)
Fixing System	Screws	
ENVIRONMENTAL AND THERMAL DATA		
IP Protection Degree	IP44	
Operating Temperature	-40÷90 -40÷194	°C °F
Storage Temperature	-40÷90 -40÷194	°C °F

Image is for illustrative purpose only. All specifications, data and drawing are subject to change without notice. Please refer to our terms of sales including our warranty and limited liabilities clauses.

A12B12HTBMT0

high temperature resistant AC fans

> CONTATTACI

Technical drawing mm (in)

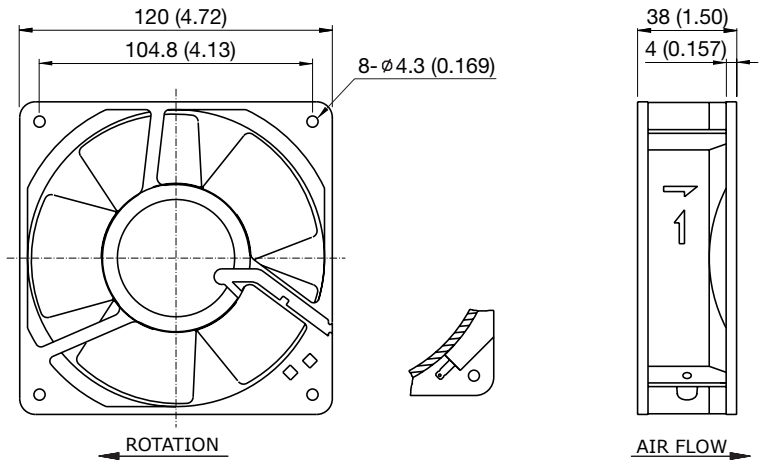

Air Performance

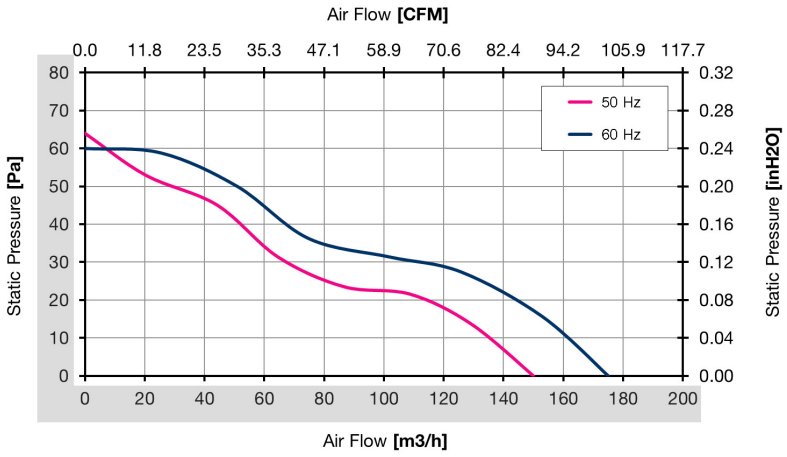

Image is for illustrative purpose only. All specifications, data and drawing are subject to change without notice. Please refer to our terms of sales including our warranty and limited liabilities clauses.